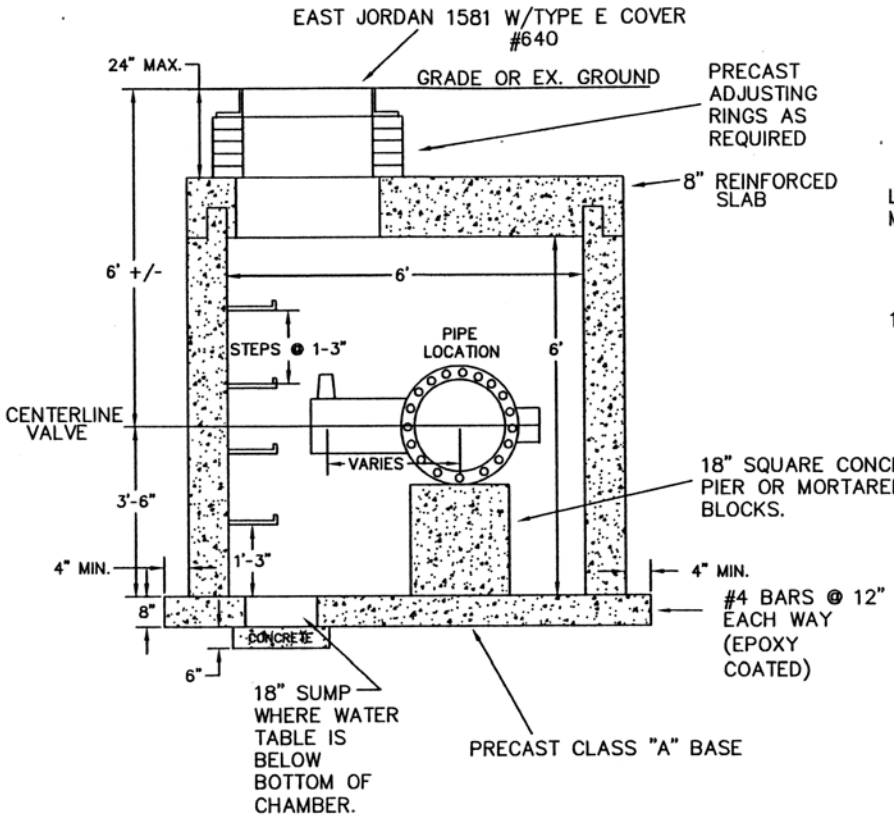

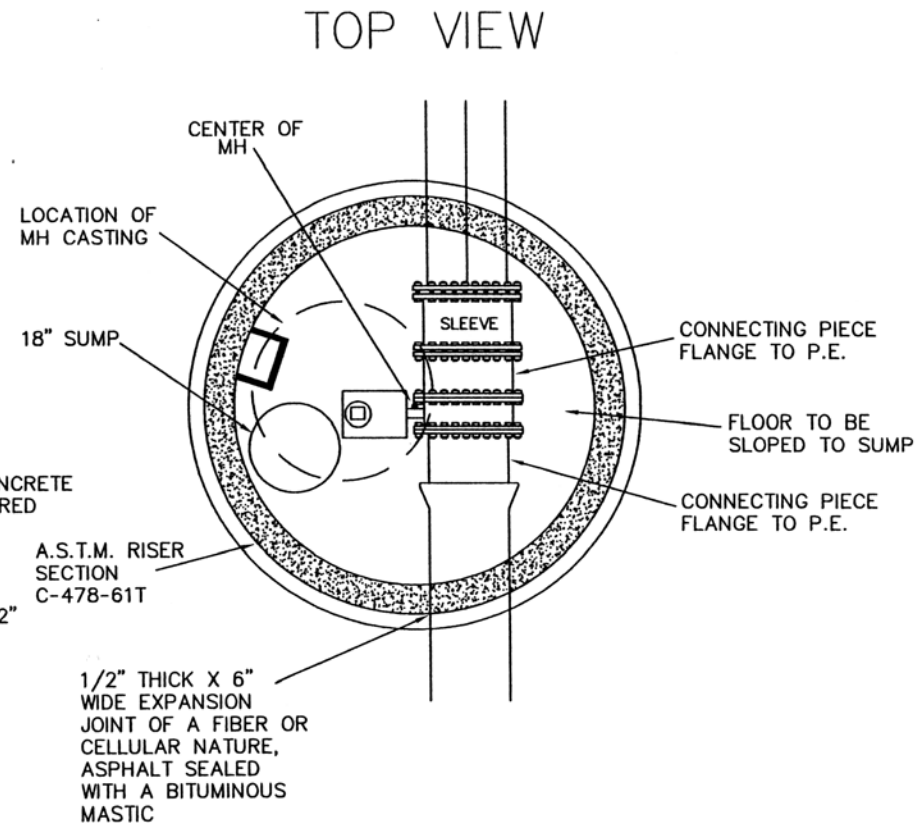

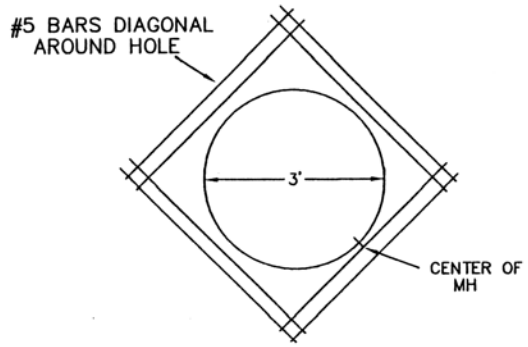

REINFORCING DETAIL AROUND HOLE IN TOP SLAB

CITY OF WYOMING
ENGINEERING DEPARTMENT

PRE-CAST VALVE CHAMBER FOR BUTTERFLY VALVES

DRAWN BY - TDK
CHECKED BY - RH
DATE DRAWN - 1-18-2006
REVISED DATE -

W-17