WYOMING STANDARD MANHOLE COVER AND FLANGE BASE

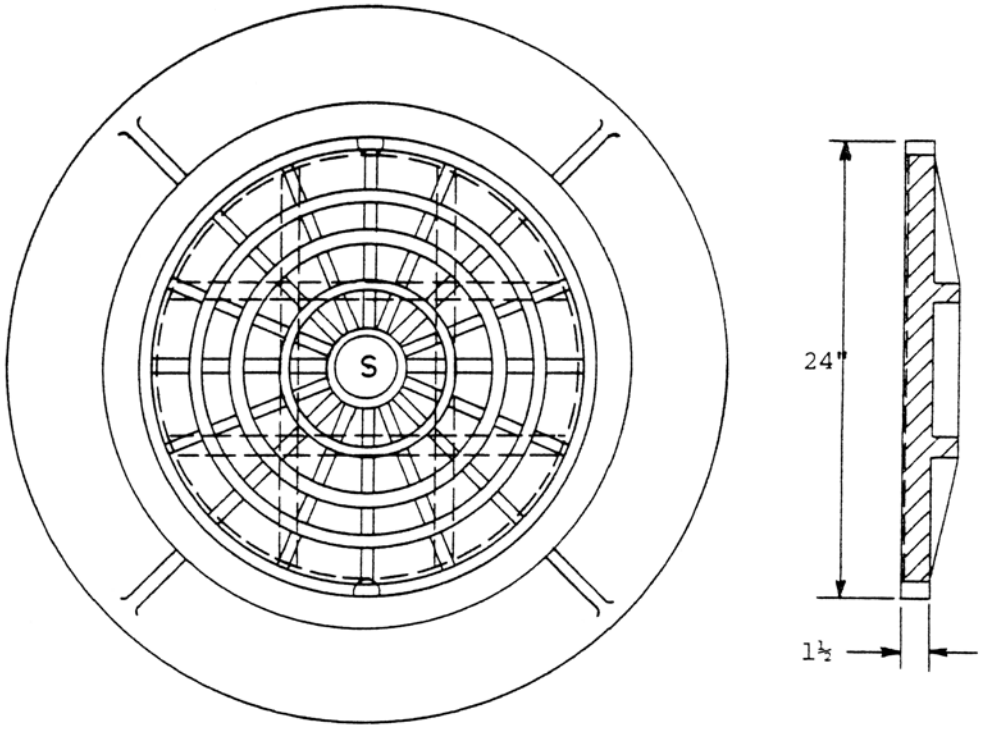

East Jordan 1120 or Approved Equal
HEAVY DUTY

Type "C", 2 Hole Vent Cover
Total Weight 350#

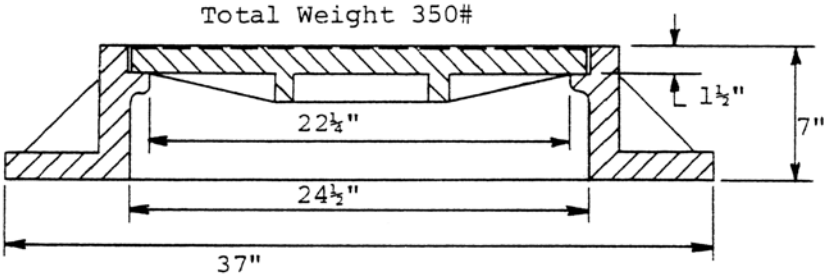

NOTE: Specify when ordering whether letters "S" or "W" are to be cast on covers.

CITY OF WYOMING DEPARTMENT OF ENGINEERING
WYOMING STD. MANHOLE COVER AND BASE FLANGE
DRAWN BY JZ. CHECKED BY HB APPROVED BY D. Minke S-6A DATE DEC. 29TH. 1976 Rev: March, 1990