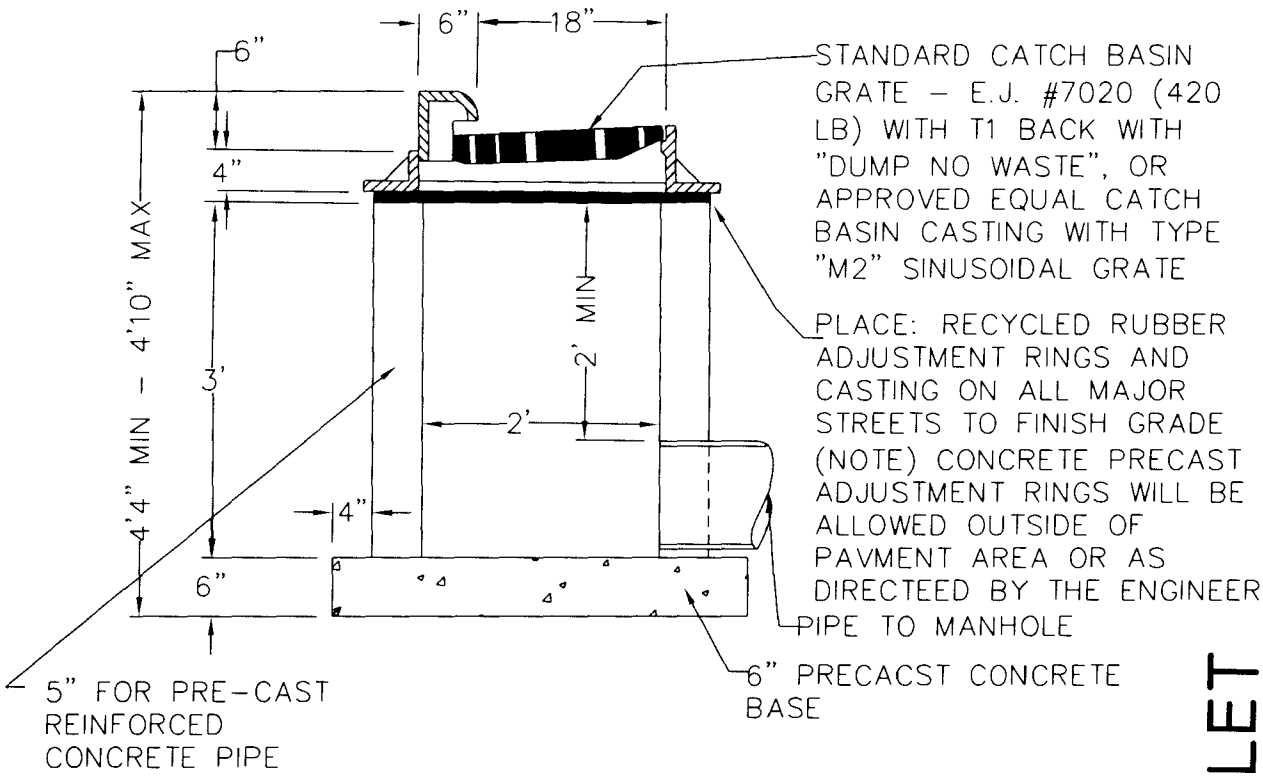

SECTION A-A

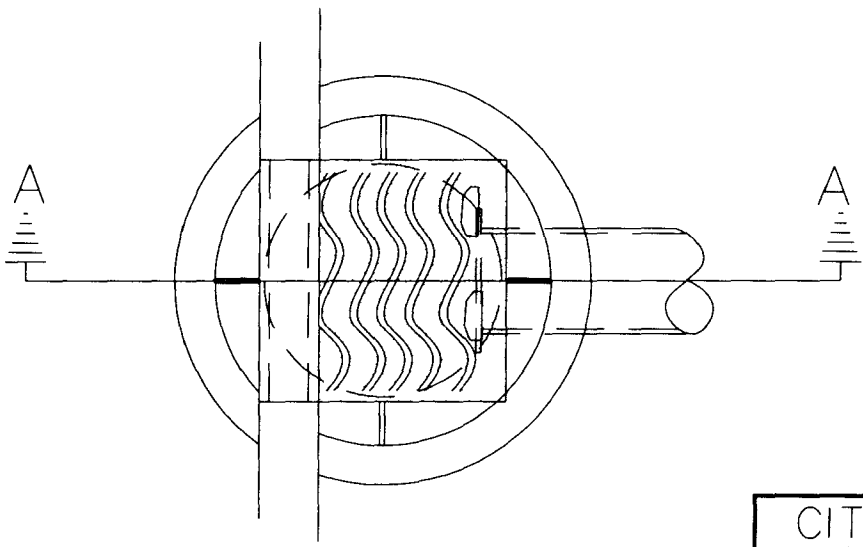

TOP VIEW

2' STANDARD DROP INLET

CITY OF WYOMING
ENGINEERING DEPARTMENT

2' STANDARD DROP INLET

DRAWN BY - ML, NM	S-5A
CHECKED BY - RH	
DATE DRAWN - 8-13-2003	
DATE REVISED - 3-2-2009	