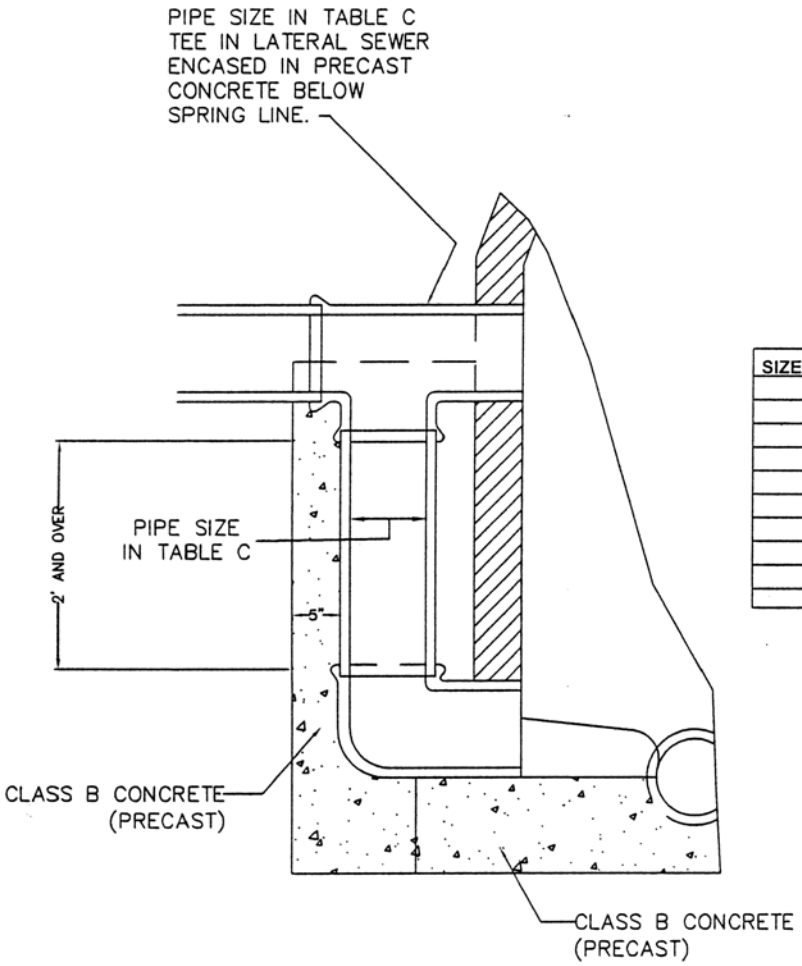

SECTION C–C

TABLE C

SIZE OF SEWER	DROP CONNECTION
8"	8"
10"	8"
12"	8"
15"	10"
18"	10"
21"	12"
24"	12"
27"	12"
30"	15"
36"	15"

STANDARD DROP CONNECTION

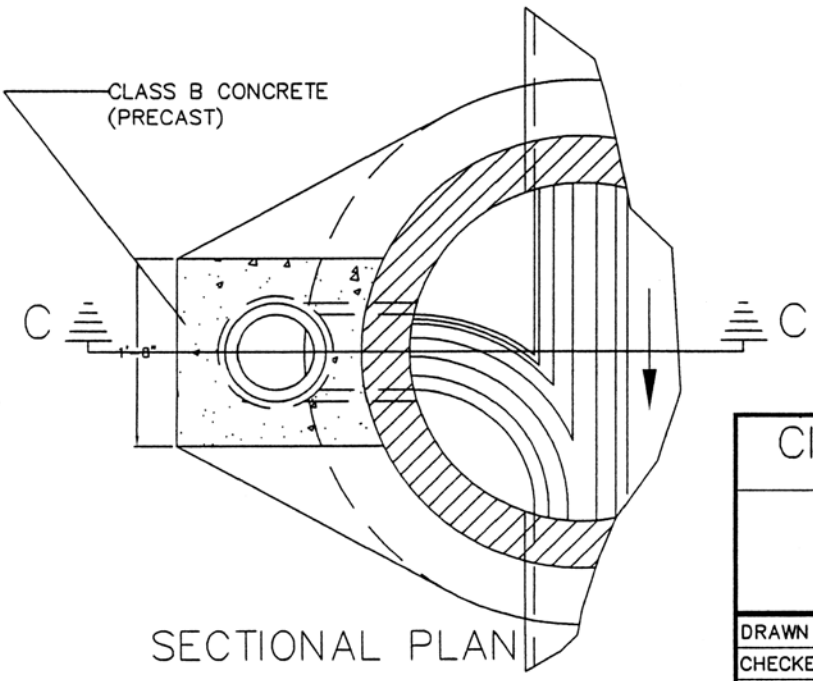

SECTIONAL PLAN

CITY OF WYOMING
ENGINEERING DEPARTMENT

STANDARD DROP CONNECTION

DRAWN BY– ML/NC	S-11
CHECKED BY– RH/CC	
DATE DRAWN– 9–4–2003	
DATE REVISED– 2–10–2006	