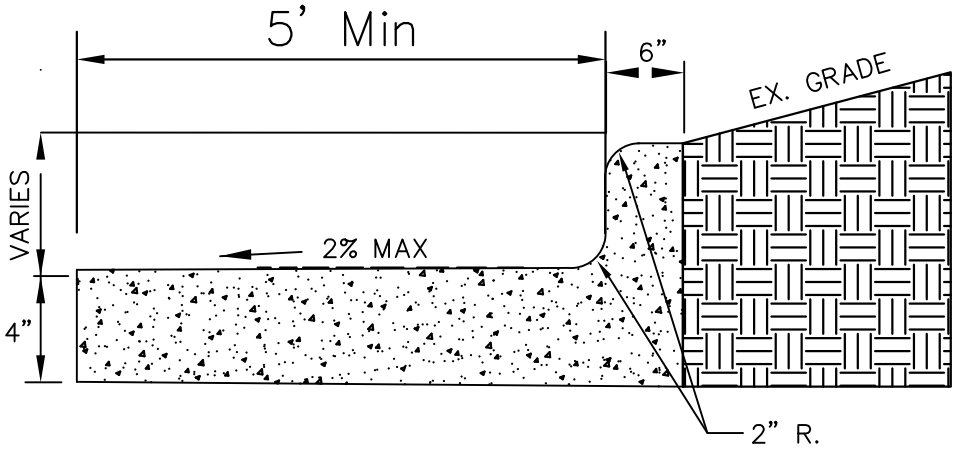

SIDEWALK WITH INTEGRAL CURB

CITY OF WYOMING ENGINEERING DEPARTMENT	
SIDEWALK WITH INTEGRAL CURB	
DRAWN BY- ZEB	I-28C
CHECKED BY- CC	
DATE DRAWN- 3-26-2015	
DATE REVISED-	