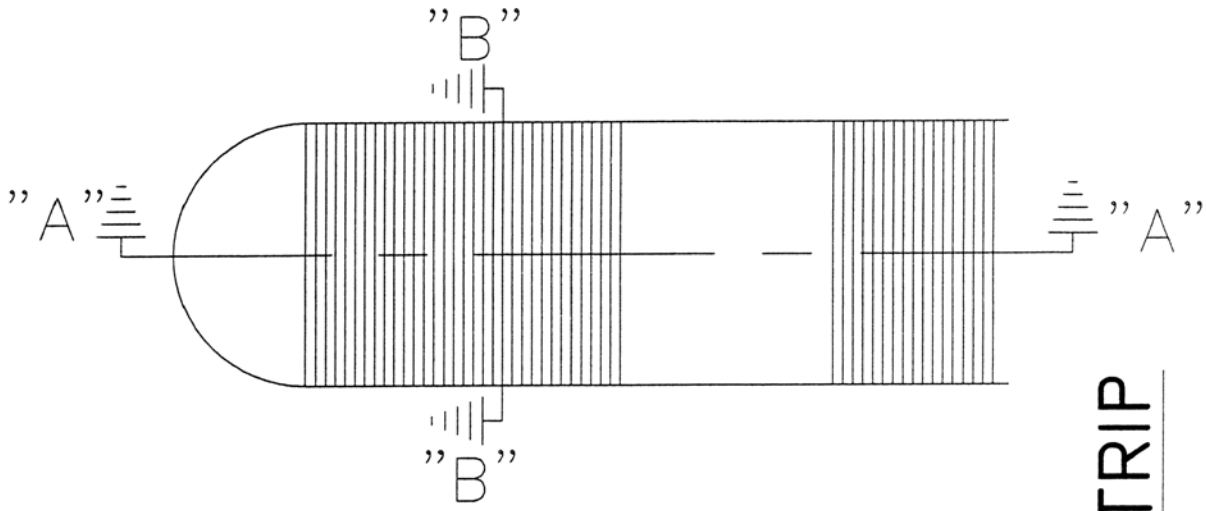

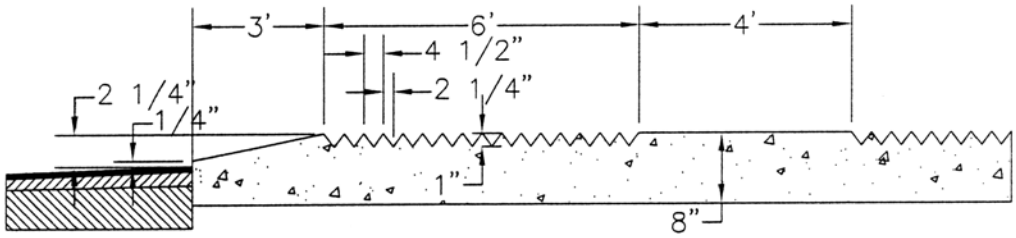

SECTION "A–A"

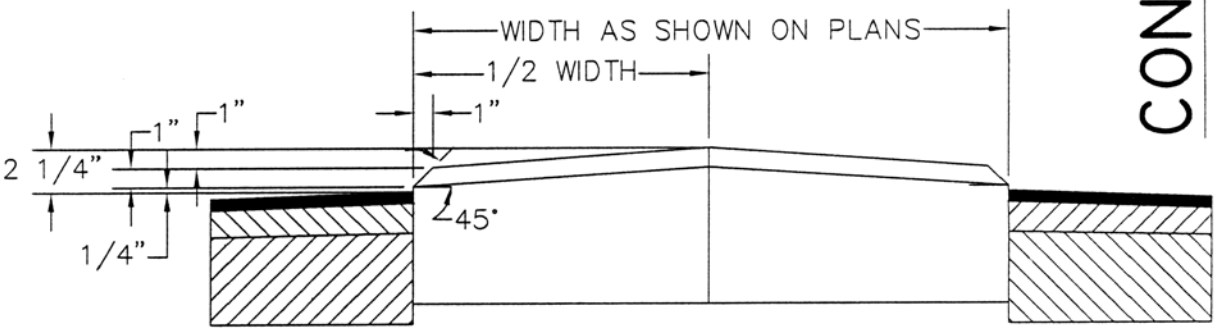

SECTION "B–B"

CONCRETE RUMBLE STRIP

CITY OF WYOMING ENGINEERING DEPARTMENT	
CONCRETE RUMBLE STRIP	
DRAWN BY– ML	I-25C
CHECKED BY–RH	
DATE DRAWN– 8–07–2003	
DATE REVISED–	